REVISION HISTORY

REV	DESCRIPTION	INCORP BY	DATE	CHECKED

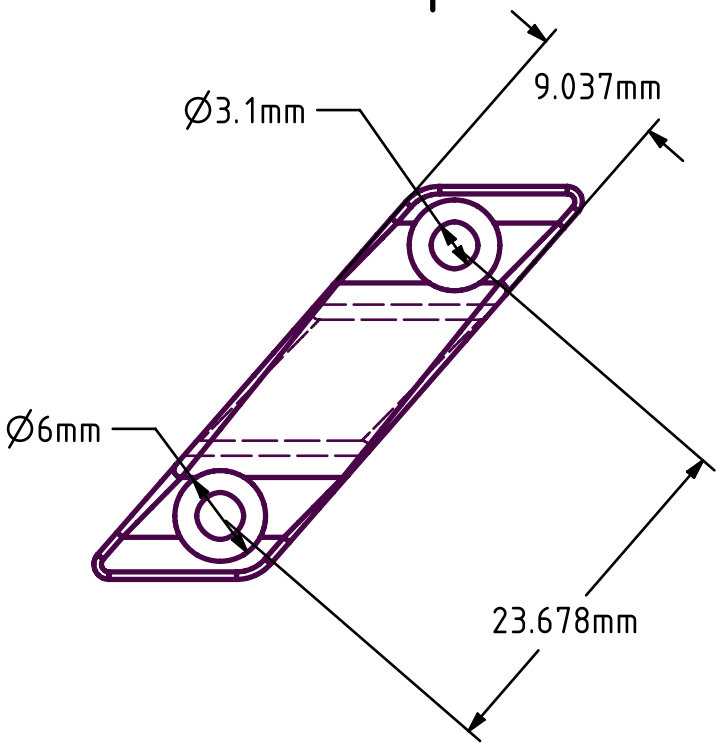

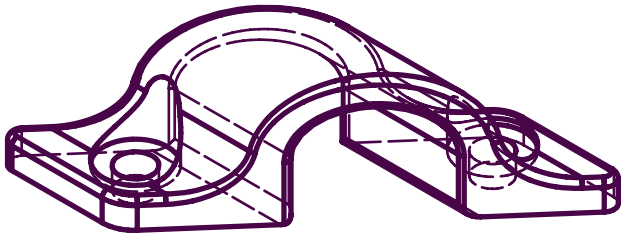

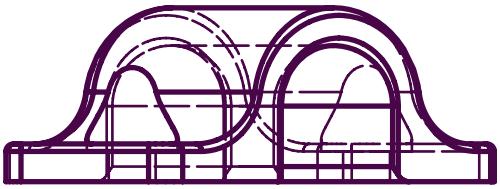

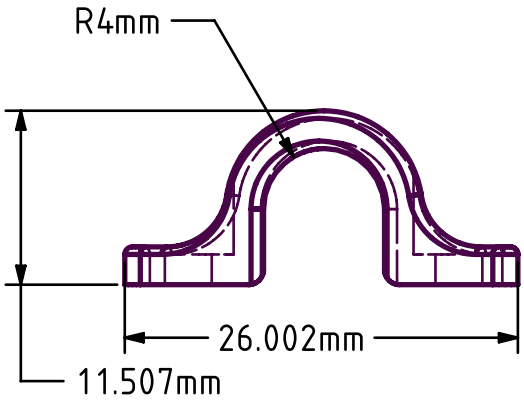

APPROVALS	INITIALS	NAME (PRINT)	DATE

TITLE

SIZE	CAGE CODE	DWG NO.	REV
A			

SCALE		SHEET